Smart level probe type APC-2000ALW/SG

NEW

- ✓ **Programmable zero shift, range and damping ratio**
- ✓ **4...20 mA output signal + HART protocol**
- ✓ **Accuracy 0.1%**
- ✓ **Local display**

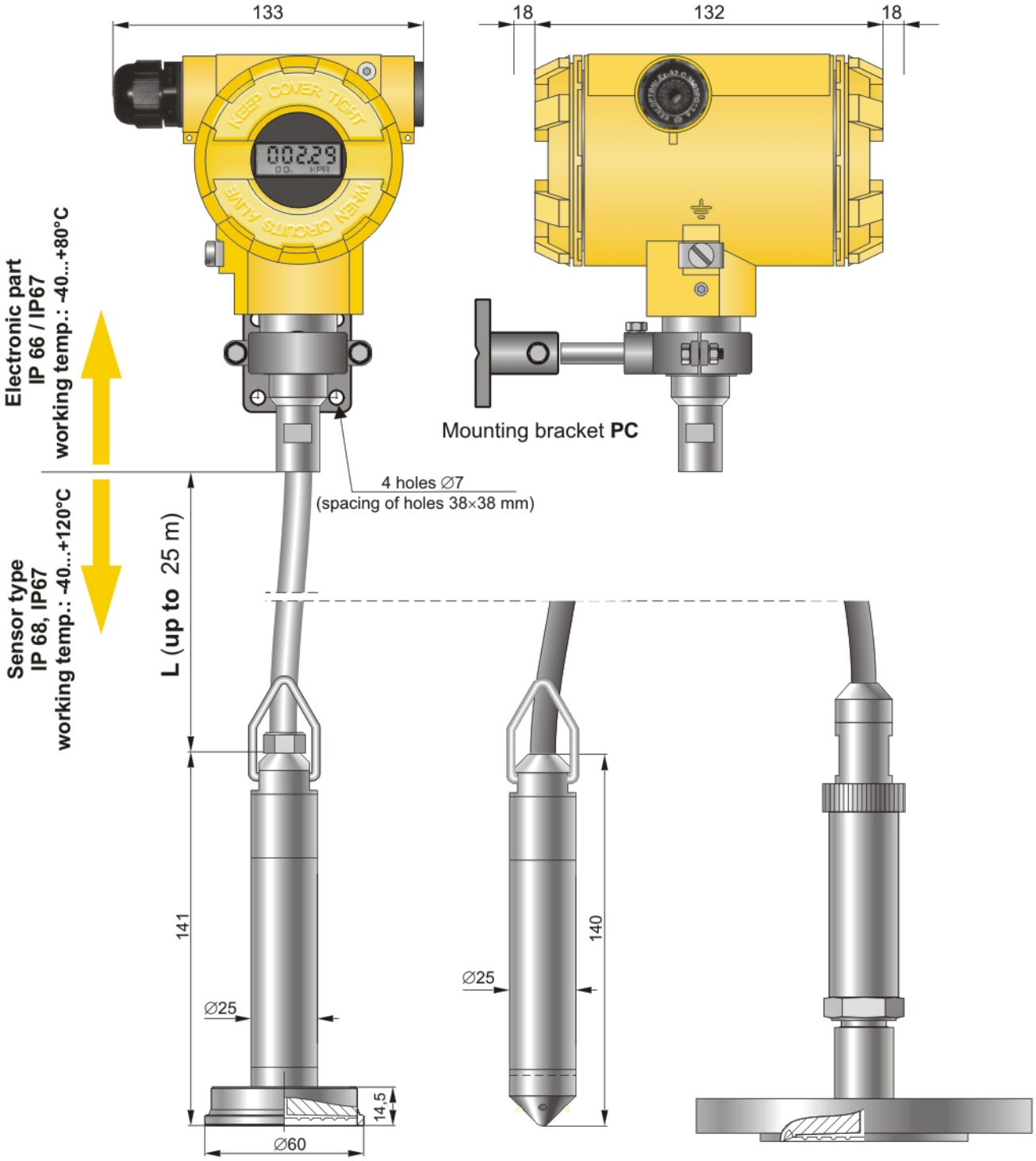

Submersible sensor type
(sensor specification according to data sheet for SGE-25.S)

Submersible sensor type
(sensor specification according to data sheet for SGE-25)

Flange or thread mounted sensor type
(sensor and flange specification according to data sheets for PCE-28 and diaphragm seal)

APC-2000ALW/SG function:

- 4…20 mA output signal + HART protocol,
- Possibilities of the adjusting both zero point and of the start and end of the measuring range, characteristic ete.with the display panel keys,
- Configurable display 5 digits with illumination (working temperature range –40…+85°C)

Electrical diagrams

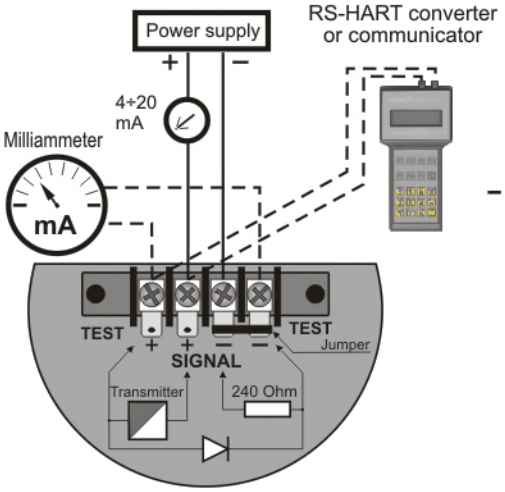

Application

The APC-2000ALW/SG level probe is applicable to measure liquid levels in tanks, deep wells or piezometers.

The APC-2000ALW/SG probe is applicable to measure levels of liquids containing contaminants or suspensions. A typical use for this probe is the measurement of levels of liquid waste in intermediate pumping stations, fermentation chambers, settling tanks etc. Because in submersible part of level probe is mounted only measuring sensor level probe can be use for measurement hot liquids max. 120° C.

Configuration

The following metrological parameters can be configured:

- The units of pressure;
- Start and end-points of set range;
- damping time constant;
- inverted characteristic (output signal 20 ÷ 4 mA).

Communication

The communication standard for data interchange with the probe is the Hart protocol.

Communication with the probe is carried out with:

- KAP-03 communicator
- Raport 2 software or other Hart communication devices.

Measuring range

No	Nominal range (FSO)	Min. set range	Overpressure limit
1	0...20 m H_2O	2 m H_2O	0...200 m H_2O
2	0...10 m H_2O	1 m H_2O	0...100 m H_2O
3	0...2,5 m H_2O	0,5 m H_2O	0...25 m H_2O

Technical data*

Metrological parameters

Accuracy ≤ ±0,1%

Long-term stability 0,16% for 2 years

Thermal error ≤ < ±0,1% (FSO) / 10°C
max. ±0,4% (FSO) in the whole compensation range

Thermal compensation range -25...120°C
-40...80°C special version

Output actualization time 0,5 s

Additional electronic damping 0...60 s.

Error due to supply voltage changes 0,002% (FSO) / V

Electrical parameters

Power supply 12...55 V DC

Additional voltage drop when display illumination switched on 3 V

Output signal 4...20 mA 2-wires + Hart protocol

Resistance required for communication min. 240 Ω

Load resistance $R[\Omega] = \frac{U_{ZAS}[V] - 12V\,*}{0{,}0225A}$

* – 15 V when display illumination switched on

Operating conditions

Operating temperature range (ambient temp.) -40...85°C

Medium temperature range -40...120°C

* more information about technical data available in user's manual.

Ordering code

APC-2000ALW/SG/___/___/___/___/___/___/L = ... m./__

Sensor type:
- **SGE-25** - specification according to data sheet SGE-25
- **SGE-25S** - specification according to data sheet SGE-25S
- **PCE-28** - specification according to data sheet PCE-28 +data sheet for diaphragm seal if requred

Special version:
(-40)- compensation range:-40..80C

Nominal range

Set range

Cable type: **PU** - polyurethane
PTFE - teflon cable shielding

Length of cable (max. 25m)

Mounting bracket:
PC
F: flange type connection

Example: Level probe APC-2000ALW/SG, mounting element PC, submersible element SGE-25, nominal range 0 ÷ 10 m.. H_2O, set range 0 ÷ 6 mH_2O, cable material PU, cable length12 m.

APC-2000ALW/SG/SGE-25/ 0 ÷ 10 m H_2O / 0 ÷ 6 m H_2O /PU/ L = 12 m./PC